## Features & External Dimensions

* Display: 128 Dots X 64 Dots
* Driver Mode: 1/64 Duty; 1/9 Bias
* Assembly: TAB
* Display Mode: Reflective / Transflective / Transmissive Type Optional; Positive; Normal / Wide Temp. Optional

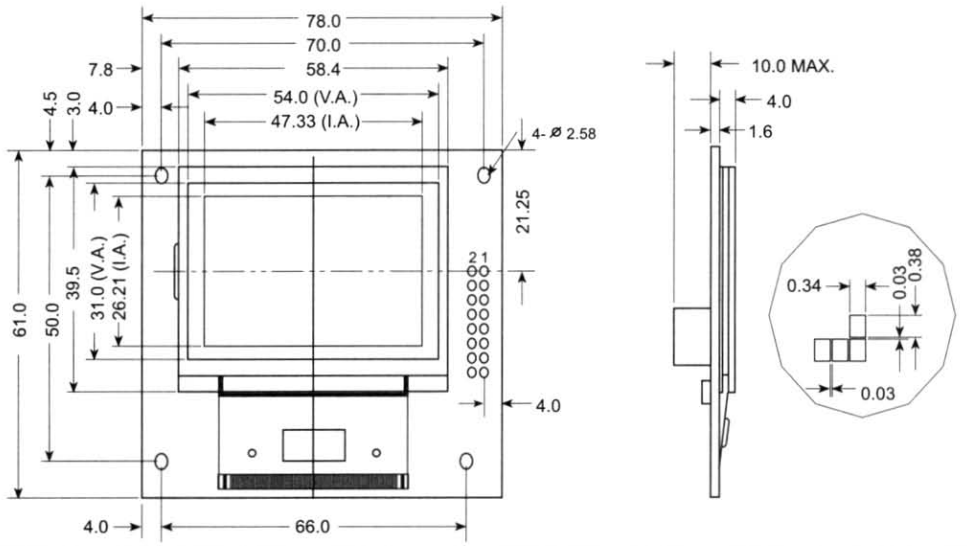


| Pin No. | Symbol |
|---|---|
| 1 | A0 |
| 2 | /RD |
| 3 | /WR |
| 4 | /RES |
| 5 | /CS |
| 6 | VSS |
| 7 | EL-SW |
| 8 | VDD |
| 9 | DB0 |
| 10 | DB1 |
| 11 | DB2 |
| 12 | DB3 |
| 13 | DB4 |
| 14 | DB5 |
| 15 | DB6 |
| 16 | DB7 |